GARMIN®

MS-RA60

Marine Entertainment System



Owner's Manual

Table of Contents

Getting Started 3
- Stereo Controls 3
  - Using the Dial to Select Items 3
  - Adjusting the Volume 4
  - Adjusting the Subwoofer Level 4
  - Entering Text 4
  - Adjusting the Backlight Brightness and Contrast 4
- Stereo Screen 4
- Connecting an Auxiliary Device 4

Bluetooth® Device Playback 6
- Connecting a Compatible Bluetooth® Device 6
- Bluetooth® Range Information 6
- Bluetooth® Source Settings 6
- Selecting a Different Bluetooth® Device 6

Radio 7
- Setting the Tuner Region 7
- Changing the Radio Station 7
- Presets 7
  - Saving a Station as a Preset 7
  - Selecting a Preset from a List 7
  - Removing Presets 7

DAB Playback 8
- Setting the Tuner Region 8
- Scanning for DAB Stations 8
  - Changing DAB Stations 8
  - Selecting a DAB Station from a List 8
  - Selecting a DAB Station from a Category 8
- DAB Presets 8
  - Saving a DAB Station as a Preset 8
  - Selecting a DAB Preset from a List 9
  - Removing DAB Presets 9

General Settings 10

Additional Stereo Control Options 11
- Connecting to a Garmin® Watch 11
- Connecting to an ARX70 Remote Control 11
- Garmin® Audio Wireless Remote Control App 11

Appendix 12
- Cleaning the Device 12
- Troubleshooting 12
  - The stereo does not respond to key presses 12
  - My Bluetooth® audio is interrupted by short breaks 12
  - The stereo does not display all song information from my Bluetooth® source 12
  - Reducing Unexpected Noise 12
  - The stereo does not receive DAB stations 12
- Specifications 12
- Stereo Dimension Drawings 13
  - Front Dimensions 13
  - Side Dimensions 14
  - Top Dimensions 14

Getting Started

⚠ WARNING

See the *Important Safety and Product Information* guide in the product box for product warnings and other important information.

Stereo Controls



Dial ①	Turn to adjust the volume. Press to switch between zones to control the volume. Turn to move through the menus or adjust a setting. Press to select the highlighted option.
☰	Press to open a menu. Press to return to the previous screen or menu.
⏎	Press to change the source. Press repeatedly to scroll through the available sources.
⏻	Press to turn on the stereo. Press to mute and un-mute the stereo. Press and hold to turn off the stereo.
⏮	BT source: Press to skip to the previous track or the beginning of the current track. AM or FM source: • Press to tune to the previous station or preset (preset mode with two or more presets saved). • Press and hold for faster tuning (manual mode only). DAB source: Press to return to the previous DAB station in the ensemble. When you reach the beginning of the current ensemble, the stereo automatically changes to the last available station in the previous ensemble. On the AUX source, select to decrease the gain for the connected source.
⏯	BT source: Press to pause or resume. AM or FM source: • Press to cycle through the tuning modes (auto or manual) and presets (when two or more presets are saved). • Press and hold to save this station as a preset. DAB source: press to scan for DAB stations.
⏭	BT source: Press to skip to the next track. AM or FM source: • Press to tune to the next station or preset (preset mode with two or more presets saved). • Press and hold for faster tuning (manual mode only). DAB source: press to advance to the next DAB station in the ensemble. When you reach the end of the current ensemble, the stereo automatically changes to the first available station in the next ensemble. On the AUX source, press to increase the gain for the connected source.

Using the Dial to Select Items

You can use the dial to highlight and select items on the screen.

- Turn the dial to highlight an item on the screen.

- Press the dial to select the highlighted option.

Adjusting the Volume

1. Turn the dial to adjust the volume for a zone or all zones on the stereo.
2. If necessary, press the dial to switch between zones.

Adjusting the Subwoofer Level

1. From a source screen, press and hold the dial.
   The SUB LEVEL adjustment appears.
2. Adjust the subwoofer level by turning the dial.

Entering Text

You can enter text to change some settings values on this device, such as changing the name of the device.

1. Use the dial to choose a letter, and press the dial to select it.
2. If necessary, select ⏮ to erase a character.
3. Add additional letters to finish entering the text.
4. Select ⏯ to save the new text.

Adjusting the Backlight Brightness and Contrast

1. Select ☰ > **SETTINGS** > **LCD**.
2. Press the dial to select brightness or contrast.
3. Adjust the brightness or contrast.
4. Select ☰ to exit the menu.

Stereo Screen

The information displayed on the stereo screen varies depending on the source selected. This example shows the stereo playing a track on a device connected using Bluetooth® wireless technology.

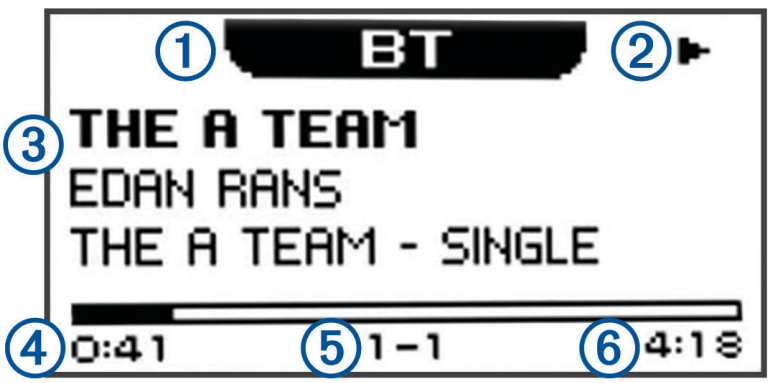

1	Source
2	Play status icon
3	Track details (if available)
4	Elapsed time
5	Current track number out of total number of tracks in the playlist (if available)
6	Track duration (if available)

Connecting an Auxiliary Device

You can connect various auxiliary devices to the stereo. These devices have either RCA connectors, a line output, or a headphone output jack.

1. Locate the auxiliary connectors on the wiring harness.
2. If necessary, connect an RCA-to-3.5 mm adapter cable to the auxiliary device.

3 Connect the auxiliary device to the AUX IN 1 RCA connectors on the wiring harness.
4 Select the **AUX** source.

Bluetooth® Device Playback

You can pair the stereo to up to eight Bluetooth media devices.

You can control the playback using the keys, but you cannot browse the music collection. You should select the song or playlist on the media device.

The availability of song information such as song title, artist name, and track duration depends on the capability of the media player and music application. The shuffle and repeat status icons are not supported over Bluetooth wireless technology.

Connecting a Compatible Bluetooth® Device

You can play media from a compatible Bluetooth device using the Bluetooth wireless connection.

1. Select the Bluetooth source.
2. Select ☰ > **DISCOVERABLE** to make the stereo visible to your compatible Bluetooth device.
3. Enable Bluetooth on your compatible Bluetooth device.
4. Bring the compatible Bluetooth device within 10 m (33 ft.) of the stereo.
5. On your compatible Bluetooth device, search for Bluetooth devices.
6. On your compatible Bluetooth device, select the RA60 stereo from the list of detected devices.
7. On your compatible Bluetooth device, follow the on-screen instructions to pair and connect to the discovered stereo.
8. If your compatible Bluetooth device asks you to confirm a passkey, make sure the passkey on the Bluetooth device and the stereo match, and select **YES** to complete the pairing process.
9. If your compatible Bluetooth device does not immediately connect to the stereo, repeat these steps.

NOTE: The DISCOVERABLE setting is automatically disabled after two minutes.

Bluetooth® Range Information

The stereo and Bluetooth wireless devices have a range of 10 m (33 ft.). For optimal performance, the Bluetooth wireless device should also have a clear line of sight to the stereo.

Bluetooth® Source Settings

With the BLUETOOTH source selected, select ☰.

DISCOVERABLE: Allows the stereo to be visible to Bluetooth devices. This setting turns off automatically after two minutes to prevent possible interruption to audio after pairing a Bluetooth device to the stereo.

REMOVE DEVICE: Removes the Bluetooth device from the stereo. To listen to audio from this Bluetooth device again, you must pair the device again.

Selecting a Different Bluetooth® Device

When you have more than one Bluetooth device paired to the stereo, you can select a different device when needed. You can pair the stereo with up to eight Bluetooth devices.

1. With the **BLUETOOTH** source selected, select ☰.
2. Select a Bluetooth device.

Radio

To listen to AM or FM radio, you must have a suitable marine AM/FM antenna properly connected to the stereo and be within range of a broadcasting station. For instructions on connecting an AM/FM antenna, see the stereo installation instructions.

To listen to DAB stations, you must have the appropriate equipment (*DAB Playback*, page 8). For instructions on connecting a DAB adapter and antenna, see the installation instructions provided with your adapter and antenna.

Setting the Tuner Region

You must select the region you are in to receive AM and FM stations properly.

You must select the region you are in to receive DAB stations properly.

NOTE: DAB stations are not available in all regions.

1. Select ☰ > **SETTINGS**.
2. Select **TUNER REGION**.
3. Select the region you are in.

Changing the Radio Station

1. Select an applicable source, such as **FM**.
2. Select ⏯ repeatedly to move through the tuning modes, and select an option:
   - Select **AUTO** to scan and stop on the next available station.
   - Select **MANUAL** to select a station manually.
   - Select **PRESET** to select a saved station preset.
3. Select ⏮ or ⏭ to tune to the station.

   When in MANUAL tuning mode, you can hold ⏮ or ⏭ to quickly advance through the stations.

Presets

You can save your favorite AM stations and FM stations as presets for easy access.

You can save your favorite DAB stations if the a DAB antenna is connected to a configured antenna port on the stereo and the stereo is set to the correct tuner region. (*DAB Playback*, page 8)

Saving a Station as a Preset

1. With an applicable source selected, tune the stereo to a station.
2. Select ☰ > **PRESETS**.
3. Select **SAVE CURRENT**.

TIP: You can quickly save the selected station as a preset by holding ⏯.

Selecting a Preset from a List

Before you can select a preset from a list, you must save at least one station as a preset.

1. Select the applicable source.
2. Select ☰ > **PRESETS**.
3. Select a preset from the list.

Removing Presets

1. With an applicable source selected, select ☰ > **PRESETS** > **REMOVE PRESET**.
2. Select an option:
   - To remove one preset, select the preset.
   - To remote all presets, select **REMOVE ALL PRESETS**.

DAB Playback

DAB functionality is available only on European models of this stereo.

DAB broadcasts are not available in all regions. When the stereo is not set to a compatible region, the DAB source is not available.

See the troubleshooting section if you cannot access the DAB source or if DAB stations are not playing properly. (*The stereo does not receive DAB stations*, page 12)

Setting the Tuner Region

You must select the region you are in to receive DAB stations properly.

1. Select ☰ > **SETTINGS**.
2. Select **TUNER REGION**.
3. Select the region you are in.

Scanning for DAB Stations

NOTE: Because DAB signals are broadcast in select countries only, you must set the tuner region to a location where DAB signals are broadcast.

1. Select the **DAB** source.
2. Select ⏯ to scan for available DAB stations.

   When scanning is complete, the first available station in the first ensemble found begins playing.

   NOTE: After the first scan is complete, you can select ⏯ again to re-scan for DAB stations. When the re-scan is complete, the system starts playing the first station in the ensemble you were listening to when you started the re-scan.

Changing DAB Stations

1. Select the **DAB** source.
2. If necessary, select ⏯ to scan for local DAB stations.
3. Select ⏮ or ⏭ to change the station.

   When you reach the end of the current ensemble, the stereo automatically changes to the first available station in the next ensemble.

   TIP: You can hold ⏮ or ⏭ to change the ensemble.

Selecting a DAB Station from a List

1. Select the **DAB** source.
2. If necessary, select ⏯ to scan for local DAB stations.
3. Select ☰ > **DAB** > **BROWSE** > **STATIONS**.
4. Select a station from the list.

Selecting a DAB Station from a Category

1. Select the **DAB** source.
2. If necessary, select ⏯ to scan for local DAB stations.
3. Select ☰ > **DAB** > **BROWSE** > **CATEGORIES**.
4. Select a category from the list.
5. Select a station from the list.

DAB Presets

You can save your favorite DAB stations as presets for easy access.

You can save up to 15 DAB-station presets.

Saving a DAB Station as a Preset

1. With the **DAB** source selected, change the stereo to a DAB station.
2. Select ☰ > **BROWSE** > **PRESETS** > **SAVE CURRENT**.

TIP: You can quickly save the selected DAB station as a preset by holding ⏯.

Selecting a DAB Preset from a List

Before you can select a DAB preset from a list, you must save at least one DAB station as a preset.

1. Select the **DAB** source.
2. Select ☰ > **BROWSE** > **PRESETS** > **VIEW PRESETS**.
3. Select a preset from the list.

Removing DAB Presets

1. With the **DAB** source selected, select ☰ > **BROWSE** > **PRESETS**.
2. Select an option:
   - To remove one preset, select **REMOVE PRESET**, and select the preset.
   - To remove all presets, select **REMOVE ALL PRESETS**.

General Settings

Select ☰ > **SETTINGS**.

When an option button is filled, the option is on. When the option button is clear, the option is off.

ZONE: Enables you to set the balance, volume limit, and names of the speaker zones.

ZONE > ZONE > TONE: Adjusts the bass, mid, and treble tones.

ZONE > PHONE VOLUME SYNC: Select the zone(s) that will sync with the volume control from the currently connected Bluetooth® device.

ZONE > ZONE 1 > SUB. FREQ.: Change the subwoofer filter frequency.

ZONE > ZONE 1 > SUB LEVEL: Change the subwoofer volume level.

ZONE > ZONE 2 > LINK TO ZONE 1: Tie Zone 2 volume and limit to Zone 1.

LCD: Adjusts the backlight brightness and contrast settings (*Adjusting the Backlight Brightness and Contrast*, page 4).

POWER SAVE: Disables the LCD backlight after 30 seconds of inactivity to save battery power.

SET DEVICE NAME: Sets the name for this stereo (*Entering Text*, page 4).

LANGUAGE: Sets the language on the device.

TUNER REGION: Sets the region used by FM and AM.

FACTORY RESET: Reset all device options to defaults.

ABOUT: Shows the software version for the stereo.

Additional Stereo Control Options

Connecting to a Garmin® Watch

For more information about the watch, see the watch manual at garmin.com/manuals.

1. Following the instructions in the watch manual, install the Garmin Audio app from the Connect IQ™ store onto the watch.
2. On the stereo, select the **BT** source.
3. Select ☰ > **BT** > **CONNECTIONS** > **DISCOVERABLE**.

   The stereo remains discoverable for two minutes.
4. Bring the watch within 3 m (10 ft.) of the stereo.

   NOTE: Stay 10 m (33 ft.) away from other Bluetooth® devices while pairing.
5. Open the Garmin Audio app on the watch.

   The first time you open the app on the watch, the watch automatically pairs with and connects to the stereo. If you need to pair to another stereo, in the Garmin Audio app, select **Settings** > **Pair New**.
6. Control the audio playback using the Garmin Audio app on the watch.

After the devices are paired, they connect automatically when they are turned on, within range, and the app is open on the watch.

Connecting to an ARX70 Remote Control

1. On the stereo, select the **BT** source.
2. Select ☰ > **BT** > **CONNECTIONS** > **DISCOVERABLE**.
3. Bring the ARX70 remote control within 10 m (33 ft.) of the stereo.

   NOTE: Stay 10 m (33 ft.) away from other ANT devices while pairing.
4. On the ARX70 remote control, press and hold ⏻ until the status LED starts alternating green and red.

   The remote control searches for the stereo. When the remote control pairs successfully, the status LED turns on green briefly and then turns off.

If the remote control cannot find the stereo, the status LED turns on red briefly and then turns off.

Garmin® Audio Wireless Remote Control App

You can use the Garmin Audio remote control app on your compatible Apple® or Android™ device to adjust the stereo volume, change the source, control playback, select and manage radio presets, and adjust stereo settings.You can use the app to update the stereo software.

The app communicates with the stereo using a wireless connection to the mobile device. You must connect your compatible device to the stereo using Bluetooth® technology to use the app.

NOTE: You cannot update the stereo software using a Bluetooth connection. You must connect the app using a Wi-Fi® connection to update the stereo software wirelessly.

For information about the Garmin Audio remote control app for compatible Apple or Android devices, go to the Apple App Store℠ or the Google Play™ store.

Appendix

Cleaning the Device

1 Dampen a soft, clean, lint-free cloth with fresh water.
2 Gently wipe the device.

Troubleshooting

The stereo does not respond to key presses

- Hold ⏻ until the stereo turns off, and turn it on again to reset the stereo.
- Disconnect power to the stereo for two minutes to reset the stereo.

My Bluetooth® audio is interrupted by short breaks

- Ensure the media player is not covered or obstructed.
  Bluetooth technology performs best with line-of-sight operation.
- Bring the media player within 10 m (33 ft.) of the stereo.
- Turn off the **DISCOVERABLE** setting after pairing a Bluetooth device to the stereo.

The stereo does not display all song information from my Bluetooth® source

The availability of song information, such as song title, artist name, and track duration, depends on the capability of the media player and music application.

Album cover artwork and shuffle and repeat status icons are not supported by this stereo on Bluetooth technology.

Reducing Unexpected Noise

If the stereo is subject to strong electrical interference, this interference might be heard through the speakers. You should take appropriate action to suppress or reduce the noise.

- Add clip-on ferrite beads to the cables connected directly to the product.
- Add clip-on ferrite beads to the device in the vessel that is causing the interference.
- Disconnect the AUX input cable from the RCA connector when it is not used.
- For additional information, go to **support.garmin.com** and contact Tech Support.

The stereo does not receive DAB stations

NOTE: The Fusion® MS-RA60 includes a built-in DAB module and receives DAB signals through a standard AM/FM antenna.

- Ensure the stereo is set to a tuner region where DAB stations are broadcast. (*Setting the Tuner Region*, page 8)
- Connect a third-party powered DAB antenna to improve DAB reception.
- For additional information, go to **support.garmin.com** and contact Product Support.

Specifications

General	
Weight	316g (11.2 oz)
Water resistance	IEC 60529 IPX7 (front), IEC 60529 IPX5 (rear)[1]
Operating temperature range	From 0 to 50°C (from 32 to 122°F)
Storage temperature range	From -20 to 70°C (from -4 to 158°F)
Input voltage	From 10.8 to 16 Vdc
Current (max.)	15 A
Current (muted)	less than 190 mA
ANT® wireless range	Up to 3 m (10 ft.)
Compass-safe distance	15 cm (5.9 in.)
Fuse	15 A mini-blade type

[1] From the front, the device withstands immersion in water of up to 1 m for up to 30 m. From the rear, the device withstands light jets of water (up to 30 kPa (4.4 psi) at distance of 3 meters) for up to 3 min.

General	
Bluetooth® wireless range	Up to 10 m (30 ft.)
Wireless frequencies/protocols	Bluetooth 2.4 Ghz at 12 dBm maximum ANT 2.4 GHz @ 7 dBm maximum

On-board, Class D Amplifier	
Output power per channel	4 x 22 W RMS at 14.4 Vdc input, 4 Ohm, 10% THD[1]
Total output music power	4 x 45 W max. 4 Ohm. 180 W max.
Line output level (max.)	5.5 V (peak to peak)
Aux input level (typical)	1 V RMS

Tuner	Europe and Australasia	USA	Japan
FM radio frequency range	87.5 to 108 MHz	87.5 to 107.9 MHz	76 to 95 MHz
FM frequency step	50 kHz	200 kHz	50 kHz
AM radio frequency range	522 to 1620 kHz	530 to 1710 kHz	522 to 1620 kHz
AM frequency step	9 kHz	10 kHz	9 kHz
DAB frequency	174 to 240 MHz (Band III)	N/A	N/A

Stereo Dimension Drawings

Front Dimensions

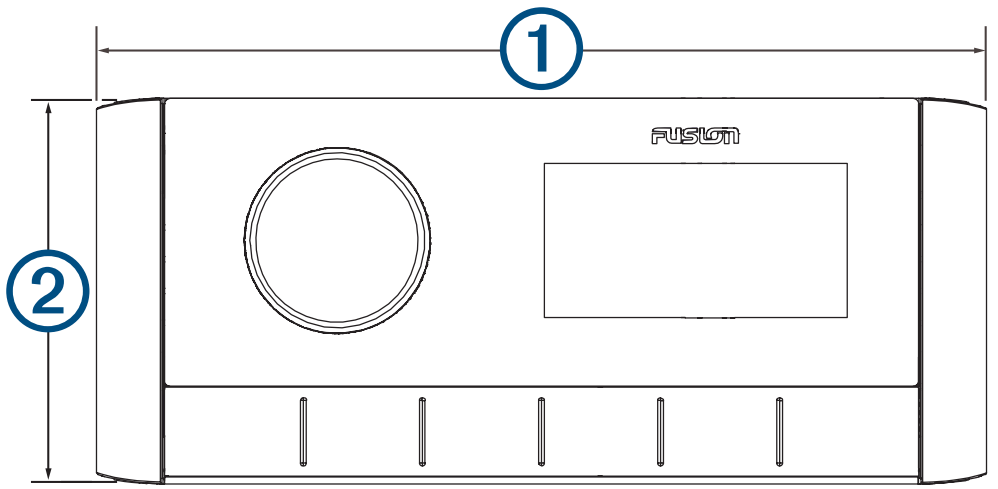

①	157 mm (6 3/16 in.)
②	68 mm (2 11/16 in.)

[1] The stereo may limit the output power to prevent the amplifier from overheating, and to maintain the audio dynamics.

Side Dimensions

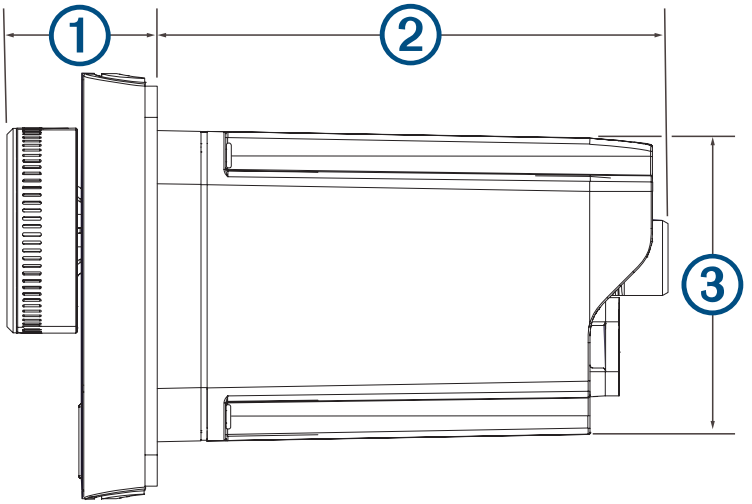

1	22 mm ($^{7}/_{8}$in.)
2	81.2 mm ($3^{3}/_{16}$ in.)
3	50 mm (2 in.)

Top Dimensions

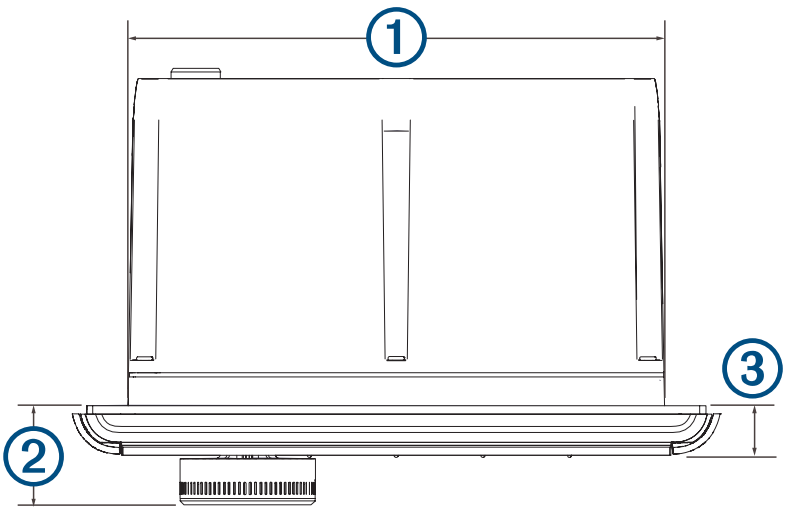

1	130 mm ($5\ ^{1}/_{8}$ in.)
2	22 mm ($^{7}/_{8}$ in.)
3	10 mm ($^{3}/_{8}$ in.)

© 2021 Garmin Ltd. or its subsidiaries

Garmin®, the Garmin logo, ANT®, Fusion®, and the Fusion logo are trademarks of Garmin Ltd. or its subsidiaries, registered in the USA and other countries. Connect IQ™ is a trademark of Garmin Ltd. or its subsidiaries. These trademarks may not be used without the express permission of Garmin.

Apple®, the Apple logo, iPod touch®, and iPhone® are trademarks of Apple Inc., registered in the U.S. and other countries. App Store℠ is a service mark of Apple Inc., registered in the USA and other countries. Android™ and Google Play™ are trademarks of Google Inc. The trademark iPhone® is used in Japan with a license from Aiphone K.K. Bluetooth® word mark and logos are owned by the Bluetooth SIG, Inc. and any use of such marks by Garmin is under license. Other trademarks and trade names are those of their respective owners.

M/N: A03942 IC: 1792A-03942